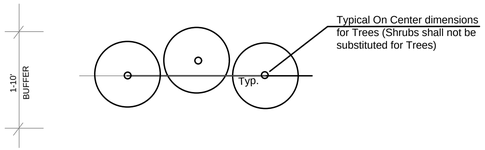

1. ROWS SHALL BE STRAIGHT, PARALLEL OR CURVED AS PER INTENT OF DESIGN
2. IF BUFFER PLANTING IS INTENDED TO ENHANCE EXISTING NATURAL BUFFER, NO HEALTHY EXISTING TREES TO BE REMOVED. DO NOT PLANT IN EXISTING TREE CRITICAL ROOT ZONES. SHOW GRAPHICALLY ON PLANS WITH TYPICAL DETAIL.

Draft Print
11/01/2019 8:04:13 AM

FIGURE #1 (1-10' BUFFER - TYPICAL) - nts

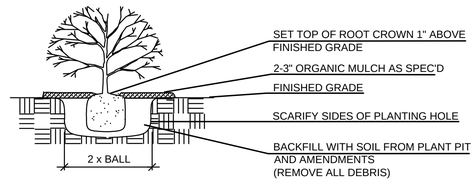

GENERAL NOTES:

1. PRUNE ROOTS IF BALL IS ROOTBOUND. REMOVE ALL CONTAINERS AND NON-BIODEGRADEABLE BURLAP.
2. WHEN BACKFILLING PLANT PIT, INCORPORATE SOIL IN WITH WATER TO REMOVE ALL AIR POCKETS AND FILL AS SHOWN.

BUFFER SHRUB PLANTING DETAIL - nts

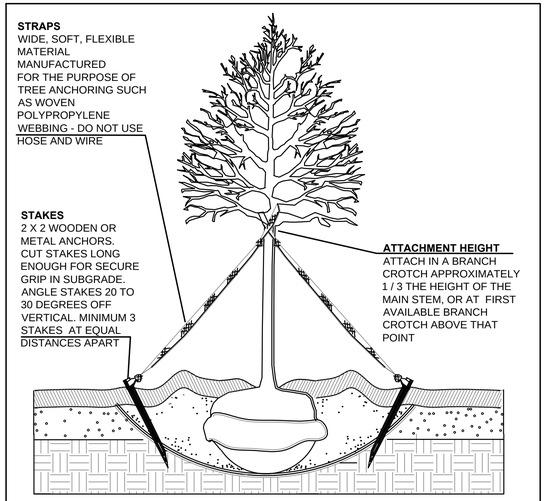

Use anchoring systems only where wind or soil conditions make it necessary. REMOVE AFTER ONE YEAR.

TREE STAKING DETAIL

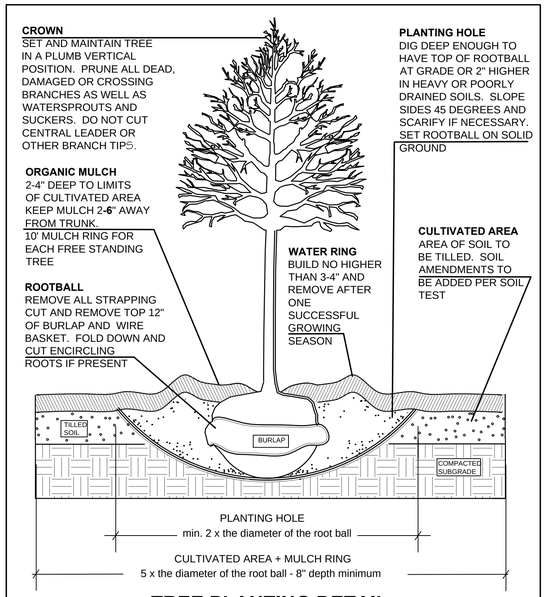

TREE PLANTING DETAIL

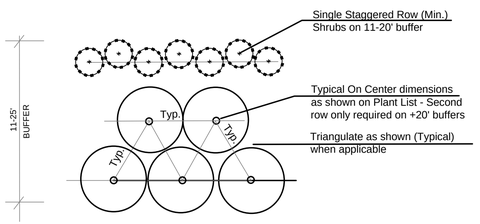

1. ROWS SHALL BE STRAIGHT, PARALLEL OR CURVED AS PER INTENT OF DESIGN
2. IF BUFFER PLANTING IS INTENDED TO ENHANCE EXISTING NATURAL BUFFER, NO HEALTHY EXISTING TREES TO BE REMOVED. DO NOT PLANT IN EXISTING TREE CRITICAL ROOT ZONES. SHOW GRAPHICALLY ON PLANS WITH TYPICAL DETAIL.

FIGURE #2 (11-25' BUFFER - TYPICAL) - nts

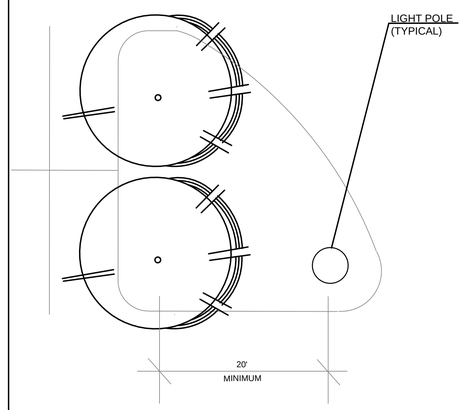

FIGURE #3 (TYPICAL DETAIL) - nts

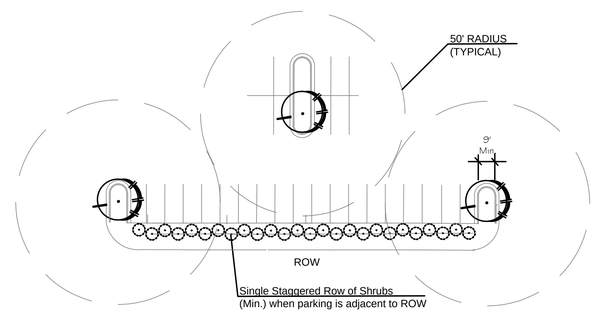

FIGURE #4 (TYPICAL DETAIL) - nts

Draft Print
11/01/2019 8:04:27 AM

Draft Print
11/01/2019 8:04:32 AM

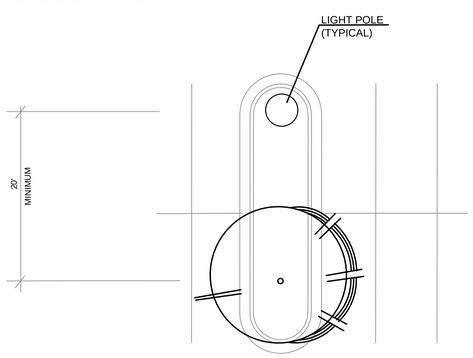

FIGURE #5 (TYPICAL DETAIL) - nts

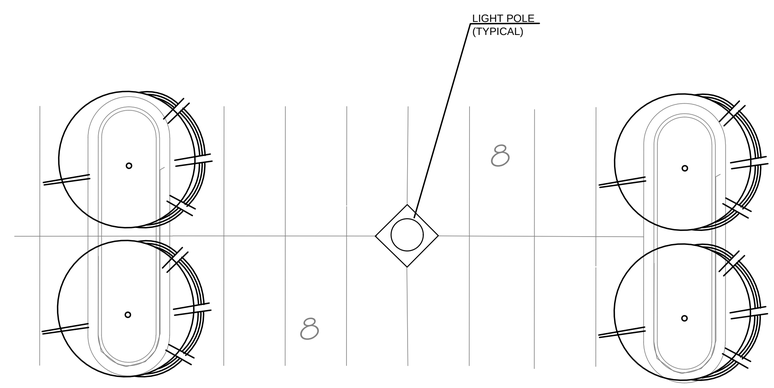

FIGURE #6 (TYPICAL DETAIL) - nts

Draft Print
11/01/2019 8:04:19 AM

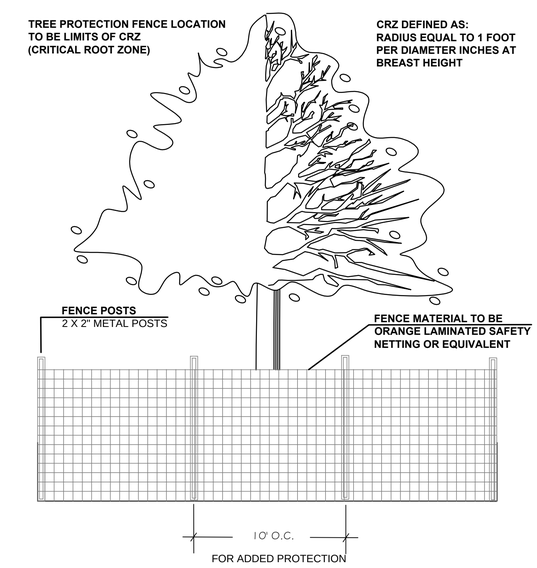

- Provide 2" deep layer of mulch containing mycorrhizae fungi over CRZ
- Make clean cuts on roots exposed by grading and backfill immediately
- Provide temporary irrigation where practical and feasible

TREE PROTECTION FENCE DETAIL